Cambridge Assessment International Education

Cambridge International AS & A Level

CANDIDATE NAME

CENTRE NUMBER

CANDIDATE NUMBER

0484869829

PHYSICS **9702/21**

Paper 2 AS Level Structured Questions **October/November 2020**

1 hour 15 minutes

You must answer on the question paper.

No additional materials are needed.

INSTRUCTIONS

- Answer **all** questions.
- Use a black or dark blue pen. You may use an HB pencil for any diagrams or graphs.
- Write your name, centre number and candidate number in the boxes at the top of the page.
- Write your answer to each question in the space provided.
- Do **not** use an erasable pen or correction fluid.
- Do **not** write on any bar codes.
- You may use a calculator.
- You should show all your working and use appropriate units.

INFORMATION

- The total mark for this paper is 60.
- The number of marks for each question or part question is shown in brackets [ ].

This document has **16** pages. Blank pages are indicated.

© UCLES 2020

Data

speed of light in free space	$c = 3.00 \times 10^{8}\,\text{m s}^{-1}$
permeability of free space	$\mu_0 = 4\pi \times 10^{-7}\,\text{H m}^{-1}$
permittivity of free space	$\varepsilon_0 = 8.85 \times 10^{-12}\,\text{F m}^{-1}$
	$(\frac{1}{4\pi\varepsilon_0} = 8.99 \times 10^{9}\,\text{m F}^{-1})$
elementary charge	$e = 1.60 \times 10^{-19}\,\text{C}$
the Planck constant	$h = 6.63 \times 10^{-34}\,\text{J s}$
unified atomic mass unit	$1\,\text{u} = 1.66 \times 10^{-27}\,\text{kg}$
rest mass of electron	$m_e = 9.11 \times 10^{-31}\,\text{kg}$
rest mass of proton	$m_p = 1.67 \times 10^{-27}\,\text{kg}$
molar gas constant	$R = 8.31\,\text{J K}^{-1}\,\text{mol}^{-1}$
the Avogadro constant	$N_A = 6.02 \times 10^{23}\,\text{mol}^{-1}$
the Boltzmann constant	$k = 1.38 \times 10^{-23}\,\text{J K}^{-1}$
gravitational constant	$G = 6.67 \times 10^{-11}\,\text{N m}^2\,\text{kg}^{-2}$
acceleration of free fall	$g = 9.81\,\text{m s}^{-2}$

© UCLES 2020

Formulae

uniformly accelerated motion	$s = ut + \frac{1}{2}at^2$ $v^2 = u^2 + 2as$
work done on/by a gas	$W = p\Delta V$
gravitational potential	$\phi = -\frac{Gm}{r}$
hydrostatic pressure	$p = \rho gh$
pressure of an ideal gas	$p = \frac{1}{3}\frac{Nm}{V}\langle c^2 \rangle$
simple harmonic motion	$a = -\omega^2 x$
velocity of particle in s.h.m.	$v = v_0 \cos \omega t$ $v = \pm \omega \sqrt{(x_0^2 - x^2)}$
Doppler effect	$f_o = \frac{f_s v}{v \pm v_s}$
electric potential	$V = \frac{Q}{4\pi\varepsilon_0 r}$
capacitors in series	$1/C = 1/C_1 + 1/C_2 + \ldots$
capacitors in parallel	$C = C_1 + C_2 + \ldots$
energy of charged capacitor	$W = \frac{1}{2}QV$
electric current	$I = Anvq$
resistors in series	$R = R_1 + R_2 + \ldots$
resistors in parallel	$1/R = 1/R_1 + 1/R_2 + \ldots$
Hall voltage	$V_H = \frac{BI}{ntq}$
alternating current/voltage	$x = x_0 \sin \omega t$
radioactive decay	$x = x_0 \exp(-\lambda t)$
decay constant	$\lambda = \frac{0.693}{t_{\frac{1}{2}}}$

© UCLES 2020

[Turn over

Answer **all** the questions in the spaces provided.

1 **(a)** **(i)** Define the *moment* of a force about a point.

.....

..... [1]

(ii) Determine the SI base units of the moment of a force.

base units ..... [1]

(b) A uniform rigid rod of length 2.4 m is shown in Fig. 1.1.

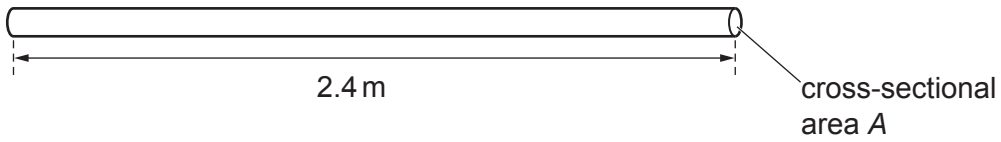

Fig. 1.1

The rod has a weight of 5.2 N and is made of wood of density 790 kg m^{-3}.

Calculate the cross-sectional area A, in mm^2, of the rod.

A = ... mm^2 [3]

(c) A fishing rod AB, made from the rod in **(b)**, is shown in Fig. 1.2.

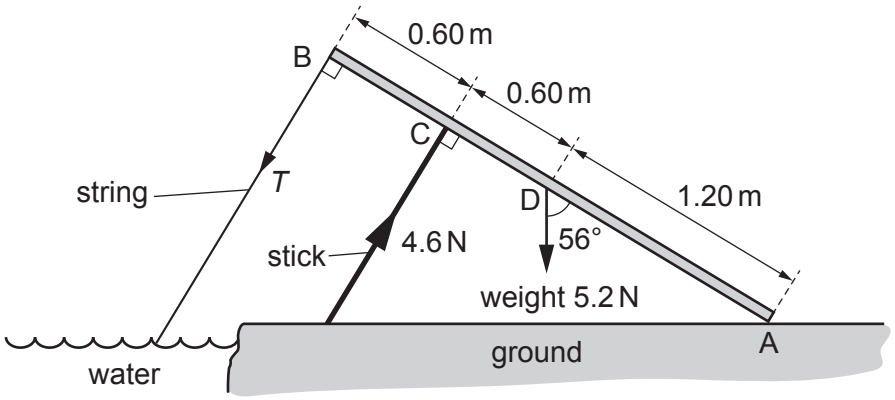

Fig. 1.2 (not to scale)

End A of the rod rests on the ground and a string is attached to the other end B. A support stick exerts a force perpendicular to the rod at point C. The weight of the rod acts at point D.

The tension *T* in the string is in a direction perpendicular to the rod. The rod is in equilibrium and inclined at an angle of 56° to the vertical.

The forces and the distances along the rod of points A, B, C and D are shown in Fig. 1.2.

(i) Show that the component of the weight that is perpendicular to the rod is 4.3 N.

[1]

(ii) By taking moments about end A of the rod, calculate the tension *T*.

T = ... N [3]

[Total: 9]

2 A small block is lifted vertically upwards by a toy aircraft, as illustrated in Fig. 2.1.

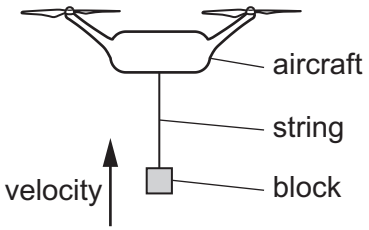

Fig. 2.1

As the block is moving upwards, the string breaks at time $t = 0$. The block initially continues moving upwards and then falls and hits the ground at time $t = 0.90$ s. The variation with time t of the velocity v of the block is shown in Fig. 2.2.

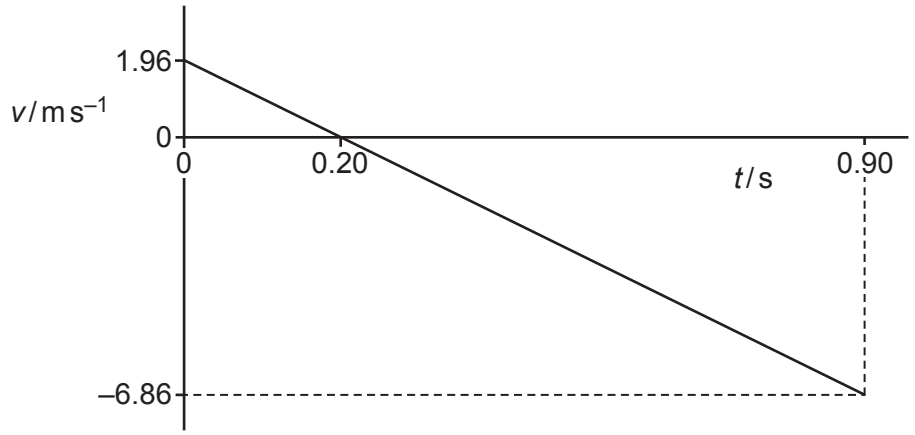

Fig. 2.2

Air resistance is negligible.

(a) State the feature of the graph in Fig. 2.2 that shows the block has a constant acceleration.

..... [1]

(b) Use Fig. 2.2 to determine the height of the block above the ground when the string breaks at time $t = 0$.

height = ... m [3]

© UCLES 2020

(c) The block has a weight of 0.86 N.

Calculate the difference in gravitational potential energy of the block between time $t = 0$ and time $t = 0.90$ s.

difference in gravitational potential energy = ... J [2]

(d) On Fig. 2.3, sketch a line to show the variation of the distance moved by the block with time t from $t = 0$ to $t = 0.20$ s. Numerical values of distance are not required.

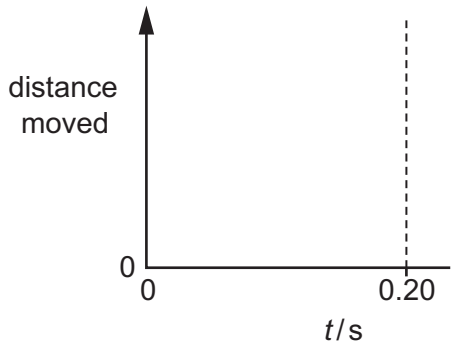

Fig. 2.3

[2]

(e) A block of greater mass is now released from the same height with the same upward velocity. Air resistance is still negligible.

State and explain the effect, if any, of the increased mass on the speed with which the block hits the ground.

.....

..... [1]

[Total: 9]

3 **(a)** Define *force*.

.....

..... [1]

(b) A ball falls vertically downwards towards a horizontal floor and then rebounds along its original path, as illustrated in Fig. 3.1.

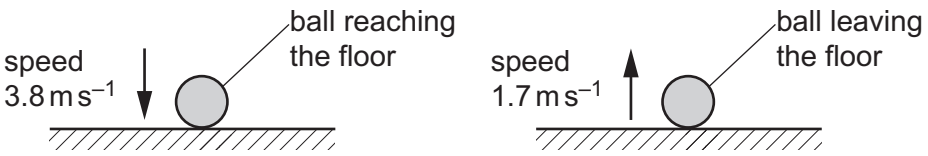

Fig. 3.1

The ball reaches the floor with speed 3.8 m s^{-1}. The ball is then in contact with the floor for a time of 0.081 s before leaving it with speed 1.7 m s^{-1}. The mass of the ball is 0.062 kg.

(i) Calculate the loss of kinetic energy of the ball during the collision.

loss of kinetic energy = ... J [2]

(ii) Determine the magnitude of the change in momentum of the ball during the collision.

change in momentum = ... N s [2]

(iii) Show that the magnitude of the average resultant force acting on the ball during the collision is 4.2 N.

[1]

© UCLES 2020

(iv) Use the information in **(iii)** to calculate the magnitude of:

1. the average force of the floor on the ball during the collision

average force = ... N

2. the average force of the ball on the floor during the collision.

average force = ... N
[2]

[Total: 8]

4 **(a)** Define, for a wire:

(i) *stress*

.....

..... [1]

(ii) *strain*.

.....

..... [1]

(b) **(i)** A school experiment is performed on a metal wire to determine the Young modulus of the metal. A force is applied to one end of the wire which is fixed at the other end. The variation of the force F with extension x of the wire is shown in Fig. 4.1.

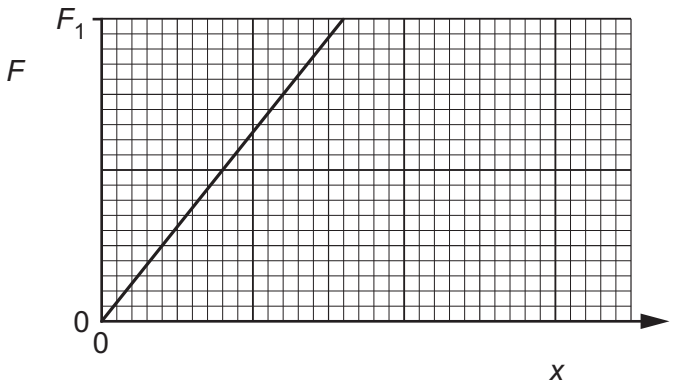

Fig. 4.1

The maximum force applied to the wire is F_1.

The gradient of the graph line in Fig. 4.1 is G. The wire has initial length L and cross-sectional area A.

Determine an expression, in terms of A, G and L, for the Young modulus E of the metal.

E = ... [2]

© UCLES 2020

(ii) A student repeats the experiment in **(b)(i)** using a new wire that has twice the diameter of the first wire. The initial length of the wire and the metal of the wire are unchanged.

On Fig. 4.1, draw the graph line representing the new wire for the force increasing from $F = 0$ to $F = F_1$. [2]

(iii) Another student repeats the original experiment in **(b)(i)**, increasing the force beyond F_1 to a new maximum force F_2. The new graph obtained is shown in Fig. 4.2.

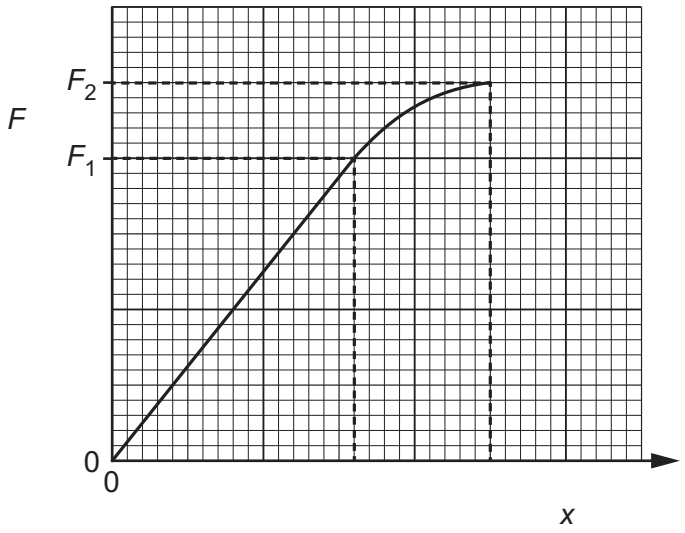

Fig. 4.2

1. On Fig. 4.2, shade an area that represents the work done to extend the wire when the force is increased from F_1 to F_2. [1]

2. Explain how the student can check that the elastic limit of the wire was not exceeded when force F_2 was applied.

.....

.....

..... [1]

(iv) Each student in the class performs the experiment in **(b)(i)**. The teacher describes the values of the Young modulus calculated by the students as having high accuracy and low precision.

Explain what is meant by *low precision*.

.....

..... [1]

[Total: 9]

5 A progressive wave Y passes a point P. The variation with time t of the displacement x for the wave at P is shown in Fig. 5.1.

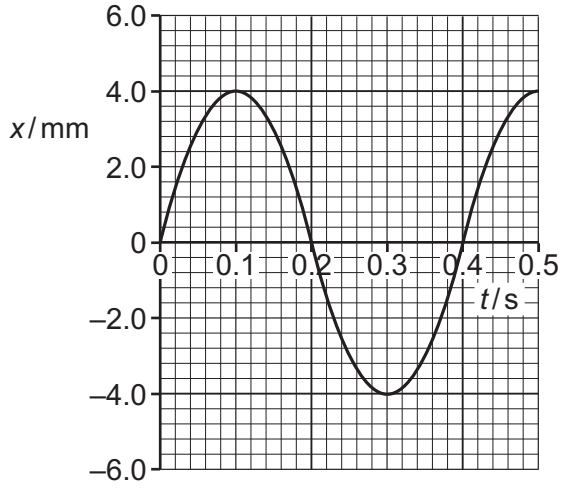

Fig. 5.1

The wave has a wavelength of 8.0 cm.

(a) Determine the speed of the wave.

speed = ... $m\,s^{-1}$ [2]

(b) A second wave Z has wavelength 8.0 cm and amplitude 2.0 mm at point P. Waves Y and Z have the same speed.

For the waves at point P, calculate the ratio

$$\frac{\text{intensity of wave Z}}{\text{intensity of wave Y}}.$$

ratio = ... [3]

[Total: 5]

© UCLES 2020

6 **(a)** Describe the conditions required for two waves to be able to form a stationary wave.

.....

.....

.....

..... [2]

(b) A stationary wave on a string has nodes and antinodes. The distance between a node and an adjacent antinode is 6.0 cm.

(i) State what is meant by a *node*.

..... [1]

(ii) Calculate the wavelength of the two waves forming the stationary wave.

wavelength = ... cm [1]

(iii) State the phase difference between the particles at two adjacent antinodes of the stationary wave.

phase difference = ... ° [1]

[Total: 5]

7 **(a)** Define the *ohm*.

.....

..... [1]

(b) A uniform wire has resistance 3.2 Ω. The wire has length 2.5 m and is made from metal of resistivity 460 nΩ m.

Calculate the cross-sectional area of the wire.

cross-sectional area = ... m^2 [3]

(c) A cell of electromotive force (e.m.f.) E and internal resistance r is connected to a variable resistor of resistance R, as shown in Fig. 7.1.

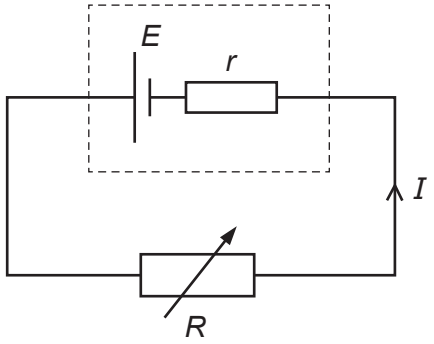

Fig. 7.1

The current in the circuit is I.

(i) State, in terms of energy, why the potential difference across the variable resistor is less than the e.m.f. of the cell.

.....

..... [1]

© UCLES 2020

(ii) State an expression for E in terms of I, R and r.

$E =$ ..... [1]

(iii) The resistance R of the variable resistor is changed so that it is equal to r.

Determine an expression, in terms of only E and r, for the power P dissipated in the variable resistor.

$P =$ ..... [2]

[Total: 8]

8 **(a)** State a similarity and a difference between a down quark and a down antiquark.

similarity: .....

difference: .....
[2]

(b) For a nucleus of aluminium-25 ($^{25}_{13}Al$):

(i) state the number of protons and the number of neutrons

number of protons = ...

number of neutrons = ...

[1]

(ii) show that the charge is 2.1×10^{-18} C.

[1]

(c) The nucleus in **(b)** is moved along a straight line from point A to point B in a uniform horizontal electric field in a vacuum, as shown in Fig. 8.1.

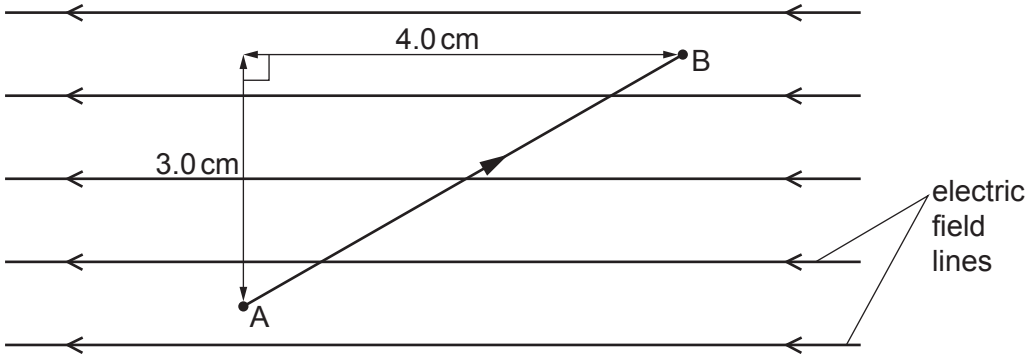

Fig. 8.1

The electric field strength is 11 kV m^{-1}.

Calculate the work done to move the charge from A to B.

work done = ... J [3]

[Total: 7]

To avoid the issue of disclosure of answer-related information to candidates, all copyright acknowledgements are reproduced online in the Cambridge Assessment International Education Copyright Acknowledgements Booklet. This is produced for each series of examinations and is freely available to download at www.cambridgeinternational.org after the live examination series.

© UCLES 2020